This article was downloaded by: [Siauliu University Library]
On: 17 February 2013, At: 06:56
Publisher: Taylor & Francis
Informa Ltd Registered in England and Wales Registered Number: 1072954 Registered office: Mortimer House, 37-41 Mortimer Street, London W1T 3JH, UK

Advanced Composite Materials
Publication details, including instructions for authors and subscription information:
http://www.tandfonline.com/loi/tacm20

# Robotized Filament Winding of Full Section Parts: Comparison Between Two Winding Trajectory Planning Rules

L. Sorrentino [a], W. Polini [b], L. Carrino [c], E. Anamateros [d] & G. Paris [e]

[a] Dipartimento di Ingegneria Industriale, Universit degli Studi di Cassino, via G. di Biasio, 43, 03043 Cassino, Italy;, Email: sorrentino@unicas.it

[b] Dipartimento di Ingegneria Industriale, Universit; degli Studi di Cassino, via G. di Biasio, 43, 03043 Cassino, Italy

[c] Dipartimento di Ingegneria Industriale, Universit degli Studi di Cassino, via G. di Biasio, 43, 03043 Cassino, Italy

[d] Agusta Westland SpA, Aerospace Composite Center, Anagni, Italy

[e] Agusta Westland SpA, Aerospace Composite Center, Anagni, Italy

Version of record first published: 02 Apr 2012.

To cite this article: L. Sorrentino , W. Polini , L. Carrino , E. Anamateros & G. Paris (2008): Robotized Filament Winding of Full Section Parts: Comparison Between Two Winding Trajectory Planning Rules, Advanced Composite Materials, 17:1, 1-23

To link to this article: http://dx.doi.org/10.1163/156855108X292648

PLEASE SCROLL DOWN FOR ARTICLE

Full terms and conditions of use: http://www.tandfonline.com/page/terms-and-conditions

This article may be used for research, teaching, and private study purposes. Any substantial or systematic reproduction, redistribution, reselling, loan, sub-licensing, systematic supply, or distribution in any form to anyone is expressly forbidden.

The publisher does not give any warranty express or implied or make any representation that the contents will be complete or accurate or up to date. The accuracy of any instructions, formulae, and drug doses should be independently verified with primary sources. The publisher shall not be liable for any loss, actions, claims, proceedings, demand, or costs or damages whatsoever or howsoever caused arising directly or indirectly in connection with or arising out of the use of this material.

///VSP///

*Advanced Composite Materials 17 (2008) 1–23*

ADVANCED COMPOSITE MATERIALS
www.brill.nl/acm

# Robotized Filament Winding of Full Section Parts: Comparison Between Two Winding Trajectory Planning Rules

**L. Sorrentino** [a,*], **W. Polini** [a], **L. Carrino** [a], **E. Anamateros** [b] **and G. Paris** [b]

[a] Dipartimento di Ingegneria Industriale, Università degli Studi di Cassino, via G. di Biasio, 43, 03043 Cassino, Italy

[b] Agusta Westland SpA, Aerospace Composite Center, Anagni, Italy

Received 10 March 2006; accepted 22 May 2007

Downloaded by [Siauliu University Library] at 06:56 17 February 2013

**Abstract**

Robotized filament winding technology involves a robot that winds a roving impregnated by resin on a die along the directions of stresses to which the work-piece is submitted in applications. The robot moves a deposition head along a winding trajectory in order to deposit roving. The trajectory planning is a very critical aspect of robotized filament winding technology, since it is responsible for both the tension constancy and the winding time.

The present work shows two original rules to plan the winding trajectory of structural parts, whose shape is obtained by sweeping a full section around a 3D curve that must be closed and not crossing in order to assure a continuous winding. The first rule plans the winding trajectory by approximating the part 3D shape with straight lines; it is called the discretized rule. The second rule defines the winding trajectory simply by offsetting a 3D curve that reproduces the part 3D shape, of a defined distance; it is called the offset rule. The two rules have been compared in terms of roving tension and winding time.

The present work shows how the offset rule enables achievement of both the required aims: to manufacture parts of high structural performances by keeping the tension on the roving near to the nominal value and to markedly decrease the winding time. This is the first step towards the optimization of the robotized filament winding technology.

© Koninklijke Brill NV, Leiden, 2008

**Keywords**

Robotized filament winding, winding trajectory planning, winding tension, winding time, full section parts, composite

* To whom correspondence should be addressed. E-mail: sorrentino@unicas.it

Edited by JSCM

© Koninklijke Brill NV, Leiden, 2008

DOI:10.1163/156855108X292648

## 1. Introduction

Robotized filament winding technology moves a deposition head along a winding trajectory in order to wind a roving impregnated by resin on a die along the directions of stresses to which the work-piece is submitted in applications [1, 2]. The trajectory planning is a very critical aspect of robotized filament winding technology, since it is responsible for both the tension constancy and the accuracy in roving location on the winding die. For this reason it influences the mechanical properties of the manufactured composite parts. It should take into account variability of winding tension and roving location inaccuracy due to winding speed [3–7].

The winding tension that is applied to the roving has to be as constant as possible during winding, for it influences directly the compactness and the alignment of the fibres. The composite resistance against loads applied along the roving deposition direction of the resulting part is due both to its fibres and to the presence of defects in the work-piece. Therefore, it is possible to define the amount of fibres: the higher is the percentage of fibre in a unitary volume, the greater is the work-piece mechanical resistance; the aim is to reduce the defects within a unitary volume by means of the winding tension that influences fibre compactness. The choice of the value of the winding tension and the need to keep constant the winding tension to the chosen value are two aspects strongly connected with the geometry of the part to wind. If the applied tension is not enough, the fibre may exhibit wrinkling or folds along the deposition direction, causing defects in the final composite part (i.e. 'marcels'). At the same time, a very high tension value may cause both fibre damage and a strong inhomogeneous compactness of the roving along the underlying surface. Solving this trade-off means that the value of the tension that allows minimization of the empty spaces, the wrinkling and the folds must be determined in order to produce a component with good structural uniformity. In the literature some studies exist on the influence of winding tension on composite part quality, but they refer to symmetric part shapes that may be obtained by traditional filament winding [8–12].

Some papers describe how to manufacture non-structural parts of complex shape, whose section is not full, by winding the roving along crossed directions, but no work exists in literature on the trajectory planning of the deposition head in order to manufacture structural parts of complex shape, such as those of a helicopter, for which it is necessary that the roving is wound along the direction of maximum stresses [6, 7].

The present work discusses original criteria for the determination of a proper winding trajectory to manufacture structural parts that involve placing the roving along the direction of the stresses applied to the parts in that are to be used in practical applications. The winding tension and time involved by the winding trajectory are discussed in detail for many sets of the process parameters. This paper deals with a particular class of structural parts: those parts whose shape may be built by sweeping a full section along a 3D curve that is called barycentre path. The barycen-

Downloaded by [Siauliu University Library] at 06:56 17 February 2013

tre path has to be closed and not crossing in order to assure a continuous winding of roving on the deposition die.

The present paper compares the trajectories planned by means of two original rules developed by robotized filament winding technology. The first rule, that is called discretized, defines a set of points, constituting the winding trajectory, in such a way as to satisfy the constraints on the geometric parameters (i.e. safety distance and trajectory angle) in order to keep the tension on the roving near to the nominal value. The second rule, that is called offset, defines the winding trajectory by offsetting a 3D curve of the distance needed to keep the tension on the roving near to the value chosen to assure good mechanical performances of the manufactured composite parts.

The two rules have been compared in terms of both winding tension and time. It has been evaluated if the tension on the roving during winding keeps near to the nominal value that has been set in order to manufacture parts of good quality. Moreover, the time needed to wind the part to be manufactured has been measured and the obtained values have been compared.

Firstly, the family of parts under consideration is presented. Then, the technological principles that guide the planning of the winding trajectory are shown and the two rules are presented. Finally, the implementation and the validation of the planning logics are described and compared in terms of winding tension and time.

## 2. Family of Composite Parts

The present work considers the family of structural parts whose shape may be obtained as a result of the sweeping of a full section along a closed not auto-intersecting 3D curve. In particular, this 3D curve represents the path to move the full section barycentre (i.e. called he barycentre path) in order to build the part shape. Some examples of parts belonging to the class considered in this paper are shown in Fig. 1. Figure 2 shows the full section and the barycentre path to build the shape of the part ‘a’ shown in Fig. 1.

The composite roving used to manufacture the component has an approximately rectangular section smaller than the part full section. Therefore, the part full section filling can be obtained by moving the roving section inside the part full section. Each location of the roving section inside the part full section involves a coil to be wound on the die in order to manufacture the 3D shape of the part. Each coil is obtained by moving the roving section along a 3D curve obtained by offsetting the barycentre path up to the barycentre of the roving section in that considered location. Therefore, the roving wound on the die is oriented as the barycentre path that is the direction of stresses applied to the part in exercise.

A grid is positioned on the full section of the part ‘a’ as seen in Fig. 1: it has cells with dimensions equal to the roving ones in the full section, placed over it (see Fig. 3). The cells represent the various locations of the roving section, necessary

Downloaded by [Siauliu University Library] at 06:56 17 February 2013

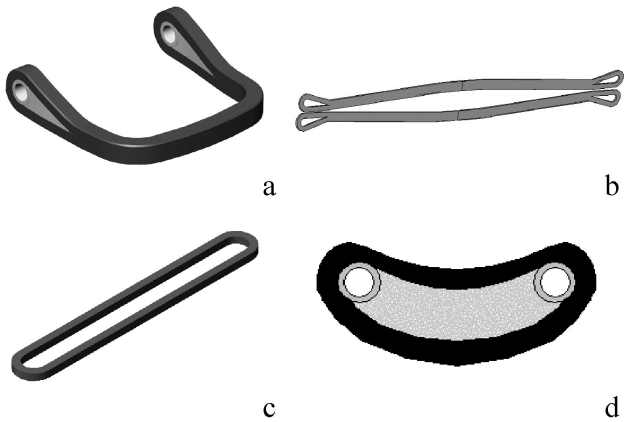


**Figure 1.** Examples of parts belonging to the considered class.

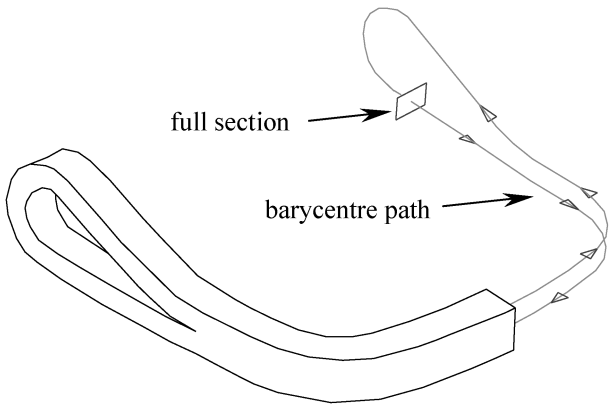


**Figure 2.** Full section and barycentre path of part (a) seen in Fig. 1.

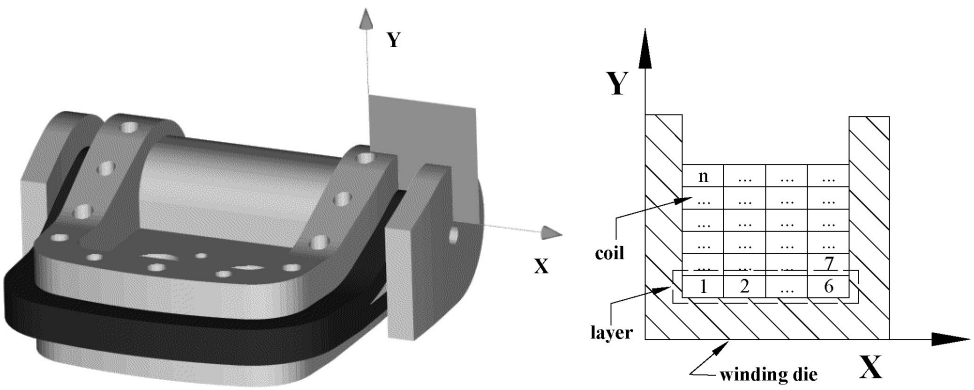


**Figure 3.** Fill of the full section of part (a) in Fig. 1.

Downloaded by [Siauliu University Library] at 06:56 17 February 2013

to fill the whole part full section. Each location corresponds to a coil to be wound, while all the coils that are in contact with the die in the same way constitute a layer.

A continuous deposition is realized starting from one place (such as 1) and ending, after a while winding round, in a new one (such as 2) from which a new winding coil starts. The winding die gives the supporting walls for the most external of the reinforcement; because of the shape of the section it is possible to take two or three retaining surfaces into consideration. It is possible to define two main directions $Y$ and $X$: $Y$ determines the growth of each single layer by approaching single coils while $X$, which is perpendicular to the first one, constitutes the direction where the multiplication of the layers takes place.

This strategy prevents formation of voids and bridges inside the part. Independently by stratification, the path along which the roving has to be wound is generated by offsetting the barycentre path up to the barycentre of the roving section: it is called base path. Each coil is due to the sweeping of the roving section along the base path. Then, the trajectory along which the deposition head should move in order to wind the roving along the defined base path needs to be defined. The winding trajectory of the deposition head is a set of points ordered in space; it represents the image of the points of the base path for each coil. The existence of a relation of biuniqueness between the points of the base path and those of the winding trajectory is absolutely necessary. To guarantee an accurate winding of the roving on the support, the winding trajectory must be tangential to the roving trajectory along each contact point between the winding roving and the rovings that have been previously wound. Moreover, the roving tension must be as constant as possible, the deposition head and the robot arms should be moved on collision free trajectories, and the free tape must not interfere with the support and the whole environment. A control volume characterized by a safety distance is generated to value the impacts in order to keep the path outside the considered volume. The end-effector has to respect the safety distance that is defined by the user, the bearing and by the deposited fibre.

## 3. Two Different Rules to Plan the Winding Trajectory

To plan a winding trajectory it is necessary to choose properly the value of three geometric parameters introduced to characterise the winding trajectory, i.e. the number of points ($n$) used to approximate the trajectory, the trajectory angle ($\theta$) and the safety distance ($d$) in order to keep in tension roving and to avoid collisions between the winding die and the deposition system during winding.

The winding trajectory is constituted by the sequence of points ($n$), ordered in space and placed on straight and circular lines, along which the deposition head moves in order to deposit the composite roving on the die. It represents the image of the points of the deposition trajectory, i.e. points $A, A_1, A_2, \ldots, A_n$ in Fig. 4 that constitute the path of the roving to deposit on the winding die. This means that when

Downloaded by [Siauliu University Library] at 06:56 17 February 2013

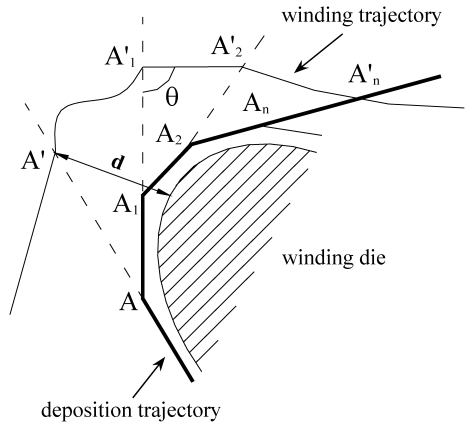


**Figure 4.** Geometric parameters.

the deposition head, i.e. the robot end-effector, performs the winding trajectory, it approximates the continuous path by points.

The deposition head moves from one point to the following one of the trajectory during winding. The angle that the vector of the deposition head movement from point to point forms with the roving direction is very critical for winding. It is called the trajectory angle and is indicated by '$\theta$'. The trajectory angle is responsible for the tension control of the roving during winding. It aims to avoid decrease in the tension value of the roving during winding, i.e. the roving would loosen. Figure 4 shows the deposition of the roving from point $A_1$ to point $A_2$ on the winding die: on the left the roving is placed on point $A_1$, while on the right it is on $A_2$. To deposit the roving between points $A_1$ and $A_2$, the deposition head moves from point $A'_1$ to point $A'_2$. During its moving from $A'_1$ to point $A'_2$, the trajectory of the deposition head $A'_1A'_2$ has to form with the roving direction $A_1A'_1$ an angle '$\theta$' greater than or equal to 90°, in order to satisfy the condition $A_1A_2 + A_2A'_2 > A_1A'_1$, that avoids roving loosening. The last parameter to consider during the winding trajectory planning is the safety distance ($d$). The deposition head has to move along the winding trajectory by keeping at a distance from the die at least equal to the safety distance value ($d$) in order to avoid collisions with the die during winding. The safety distance is calculated perpendicularly to the die. These three geometric parameters are taken into account by the two rules introduced in the following to plan the winding trajectory of detail A in Fig. 5 (called a fork).

### *3.1. Discretized Rule*

The discretized rule plans the winding trajectory as a sequence of points. The points are connected by straight lines that constitute the winding trajectory along which the robot end-effector moves. In this way the discretized rule approximates a smooth curve by a sequence of straight lines. Each point corresponds to a point of the deposition trajectory on the die and it has to satisfy all the constraints previously introduced for the geometric parameters.

Downloaded by [Siauliu University Library] at 06:56 17 February 2013

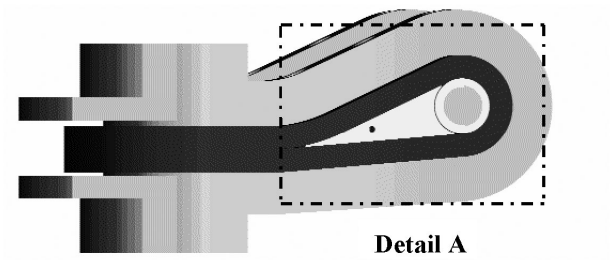


**Figure 5.** Detail of a full section part.

Downloaded by [Siauliu University Library] at 06:56 17 February 2013

The number of points used to discretize the continuous winding trajectory and, therefore, the deposition trajectory, influences the regularity of the deposition head movement. In fact, an increase of the number of points makes the movement of the deposition head more continuous and more harmonious during winding, since it avoids a sudden change in the head's direction. A more and more continuous movement of the deposition makes the occurrence of tension loosening during winding unlikely and it increases the accuracy and the repeatability in performing the winding trajectory. The movement of the robot arm near a trajectory point involves a deceleration before reaching the point and an acceleration once the point is passed; the speed profile of the robot arm is trapezoidal. The acceleration and deceleration ramps become wider for more sudden changes in the trajectory direction. Therefore, the choice of the number of points constituting the trajectory should guarantee to reduce the ramp width in order to have a speed as constant as possible.

This discretized rule fixes the minimum value of the safety distance ($d$); if the distance of the deposition head from the die during winding is equal to or longer than this minimum value, there are no collisions. The value of the safety distance strongly depends on the value of the trajectory angle '$\theta$'. If the value of the safety distance does not allow the condition on the value of the trajectory angle previously introduced ($\theta \geqslant 90°$) to be satisfied, the value of the safety distance should be increased as far as the trajectory angle satisfies its constraints. In fact, during its moving from $A_1'$ to point $A_2'$ along the control volume in Fig. 6, the trajectory of the deposition head $A_1'A_2'$ does not form with the roving direction $A_1A_1'$ an angle greater or equal to 90°. Therefore, it is necessary to increase the safety distance to $d' > d$ in order to have a trajectory angle ($\theta$) at least equal to 90°, as shown in Fig. 7. On the other hand, an excessive increase of the safety distance may cause collisions between the deposition system or the robot arm and the winding die during winding, especially for small parts, and long winding time. Therefore, the value of the safety distance may be determined by resolving the trade-off between the trajectory angle ($\theta \geqslant 90°$), the winding time and the collisions.

### *3.2. Offset Rule*

The offset rule implements a simple but effective method to plan the winding trajectory of any part belonging to the family described in the previous paragraph. For

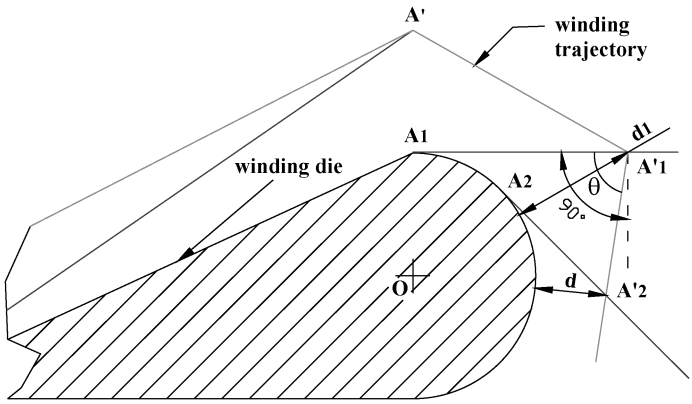


**Figure 6.** The trajectory angle assumes in $A'_1$ a value lower than 90°.

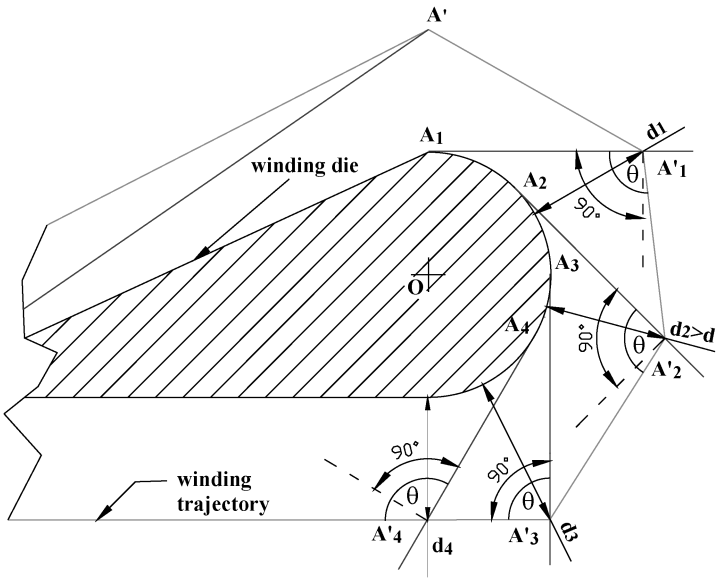


**Figure 7.** A winding trajectory characterised by a value of the trajectory angle greater than 90°.

a 3D component, like that represented in Fig. 1(a), the offset rule plans the winding trajectory by offsetting the barycentre path used to sweep the part full section in order to build the part 3D solid model (see previous paragraph). The barycentre path is even used to sweep the roving section in order to wind a coil on the die.

The obtained winding trajectory is constituted by straight and circular lines, each one characterised by two or three points, along which the deposition head moves in order to wind the composite roving on the die. The starting and ending points of each line belong to the set of $n$ points used to approximate the trajectory. The number $n$ of points is very small for the trajectory planned by the offset rule, since two and three points are used to approximate a straight and a circular line respectively.

Downloaded by [Siauliu University Library] at 06:56 17 February 2013

This small number of points allows the robot arm to achieve a constant speed along each straight or circular line. This sequence of straight and circular lines makes the movement of the deposition head more continuous and more harmonious during winding since it avoids a sudden change in the head's direction. A more and more continuous movement of the deposition system makes the occurrence of tension variation unlikely during winding and it increases the accuracy and the repeatability in performing the winding trajectory.

Moreover, the winding trajectory planned by offsetting the barycentre path keeps the tension value on the roving at the nominal value that assures parts of good mechanical performance, since it is characterised by a trajectory angle higher than 90°. The deposition system moves from $A_1$ to $A_4$ in Fig. 8 along the trajectory during winding of detail A in Fig. 5. The trajectory angle ($\theta$) is higher than 90° in each of the 4 considered points of the winding trajectory ($A_1$–$A_4$) shown in Fig. 8. If we fix 2 points on the winding die, $A_1$ and $A_2$, and the corresponding 2 points on the winding trajectory, $A'_1$ and $A'_2$ as shown in Fig. 9, the 2 triangles $A_1A'_1O$ and $A_2A'_2O$ are congruent, since they have two sides and an angle equal. Therefore $A_1A'_1 = A_2A'_2$ and $A_1A_2 + A_2A'_2 > A_1A'_1$, which implies a constant tension value along the winding. If $A_1A_2 + A_2A'_2 < A_1A'_1$ the length of the unwound roving leading out the winding die increases when the deposition head moves from point $A'_1$ to $A'_2$ producing a decrease in tension during winding.

The value of the trajectory angle characterizing the offsetting trajectory decreases with the increase of the distance of the winding trajectory from the winding die as shown in Fig. 10. The trajectory angle assumes a value of 90° when the winding

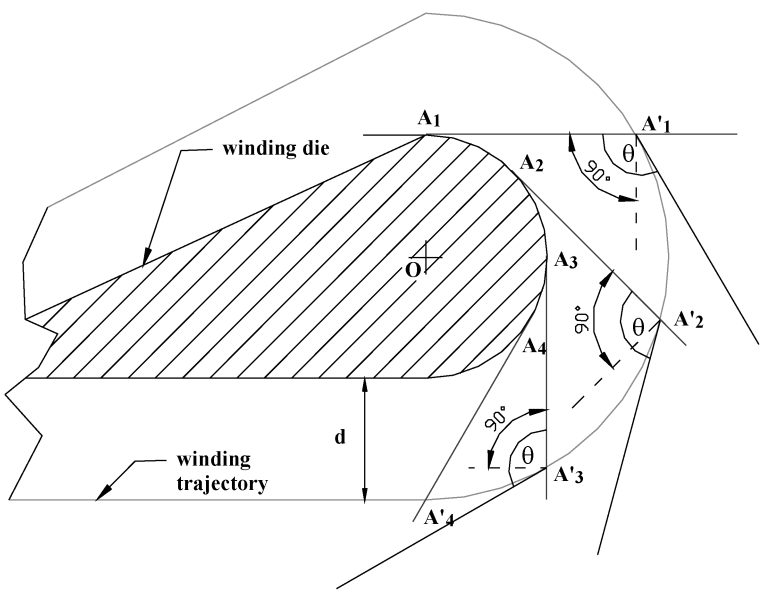


**Figure 8.** Trajectory angle characterizing an offsetting trajectory.

Downloaded by [Siauliu University Library] at 06:56 17 February 2013

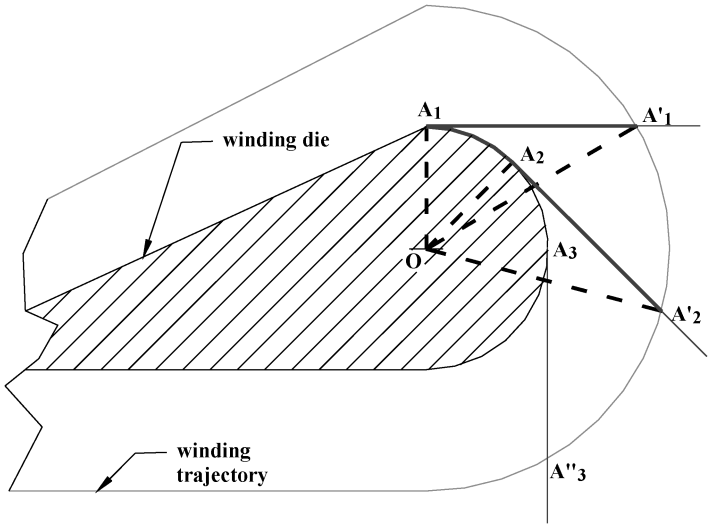


**Figure 9.** Roving is tensioned during winding by an offsetting trajectory.

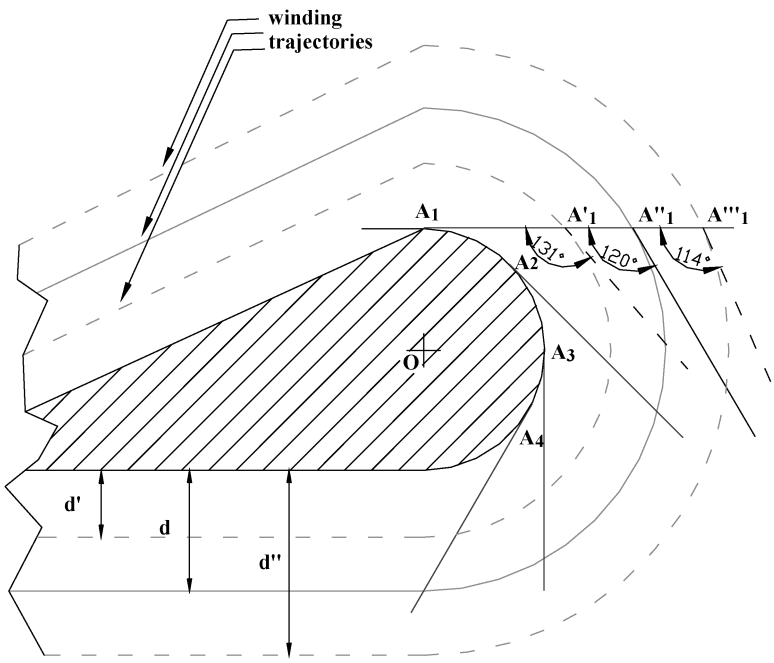


**Figure 10.** Trajectory angle for different value of the distance of the offsetting trajectory from the die.

trajectory is put at infinite distance from the die. For a fixed safety distance ($d$), the value of the trajectory angle remains constant along the winding trajectory, as shown in Fig. 11. This involves a more continuous movement of the deposition

Downloaded by [Siauliu University Library] at 06:56 17 February 2013

system that does not cause a sudden change in the head's direction, thus keeping the tension on the roving near to the nominal value.

Figures 12 and 13 show the winding trajectories, that have been planned by means of the discretized and the offset rules respectively, in order to manufacture the fork shown in Fig. 1(a).

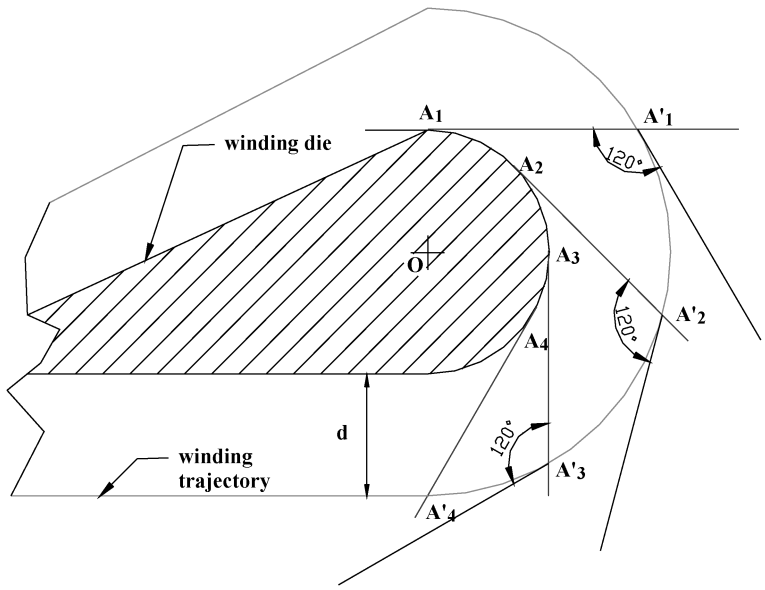


**Figure 11.** Trajectory angle along the whole offsetting trajectory for a fixed safety distance ($d$).

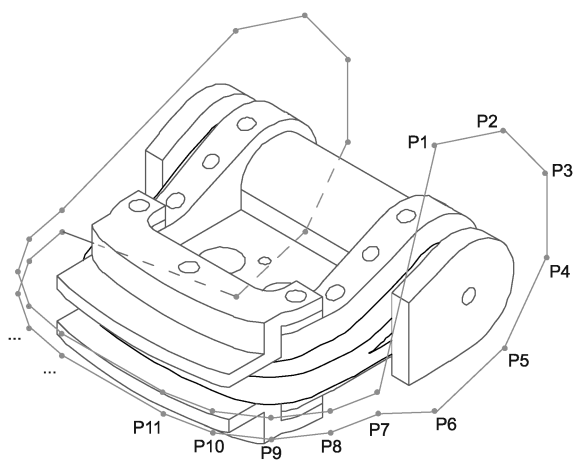


**Figure 12.** Winding trajectory planned by the discretized rule to manufacture the fork in Fig. 1(a).

Downloaded by [Siauliu University Library] at 06:56 17 February 2013

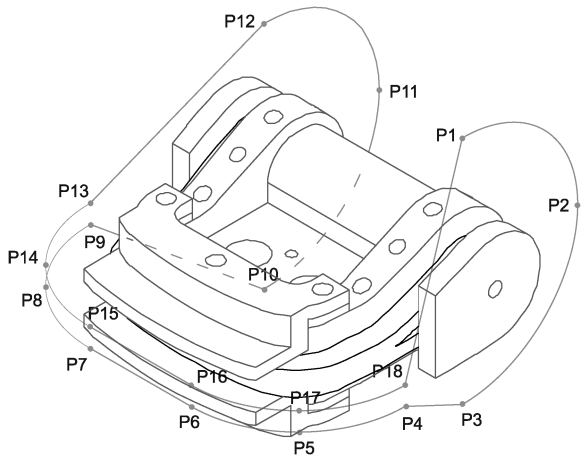


**Figure 13.** Winding trajectory planned by the offset rule to manufacture the fork shown in Fig. 1(a).

## 4. Comparison Between Discretized and Offset Rules

The discretized and offsetting rules have been used to plan a set of winding trajectories that have been implemented by means of a robotized cell constituted by an anthropomorphic robot, a unique and innovative device and a winding die, as shown in Fig. 14 [13–15]. The robot is an anthropomorphic Kuka, with 6 d.o.f., payload 45 kg, max. reach 2041 mm, work envelope volume 24 $m^3$, repeatability $< \pm 0.15$ mm. The winding device has been designed and built on the basis of compactness, structural lightness, stiffness and functionality principles, in order to guarantee both the maximum dexterity of the robot, to minimize the probability of crashes between the winding die and the components of the cell, and to improve the control of the process parameters for accuracy and repeatability [14, 15]. The feeding device shows a modular structure constituted by four critical subgroups or modules: the main frame, the roving-guide system, the winding tensioner and the deposition system.

A simple part has been used as benchmark. It is commonly used by an important Italian aeronautic company to test alternative composites manufacturing technologies and systems (see Fig. 15). The material used for the experimental tests is carbon roving impregnated by epoxy resin, conforming to MIL-R-9300 requirements. The slip roving consists of 12 thousand (12K) filament-count tows. Polyacrylonite (PAN) precursor graphite fibres are used. The slip roving has a $3.2 \pm 0.8$ mm width and a 0.76–0.85 g/m yield.

The part usually requires about 90 revolutions around the supporting die. A set of experimental tests has been designed by means of a full factorial experimental plan, as shown in Table 1. Three values of the number of points used to approximate the trajectory ($n = 14, 30, 44$), two values of the trajectory angle ($\theta = 90°, 100°$) and four values of the safety distance ($d = 50, 70, 90, 140$ mm) have been used with the discretized rule. Three values of the safety distance ($d = 40, 90, 140$ mm) have been

Downloaded by [Siauliu University Library] at 06:56 17 February 2013

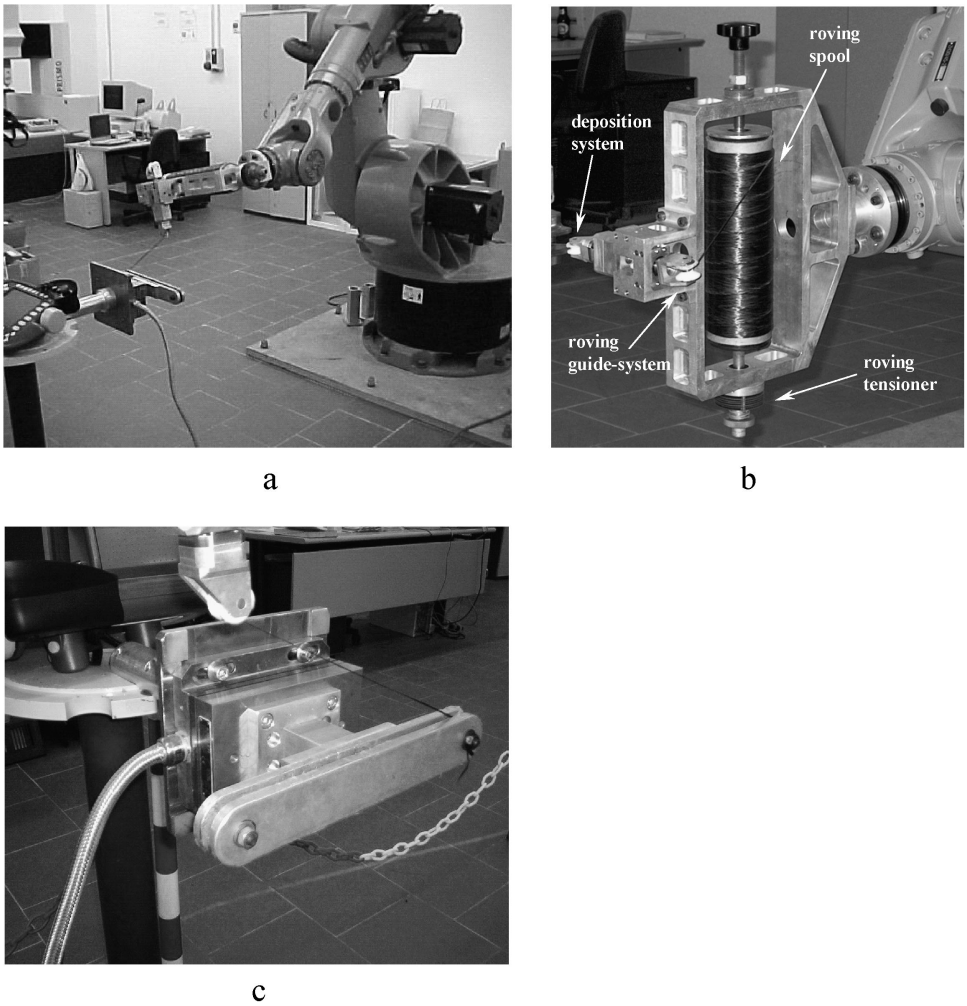


**Figure 14.** (a) Robotized filament winding cell; (b) Feed and deposition head; (c) Winding die.

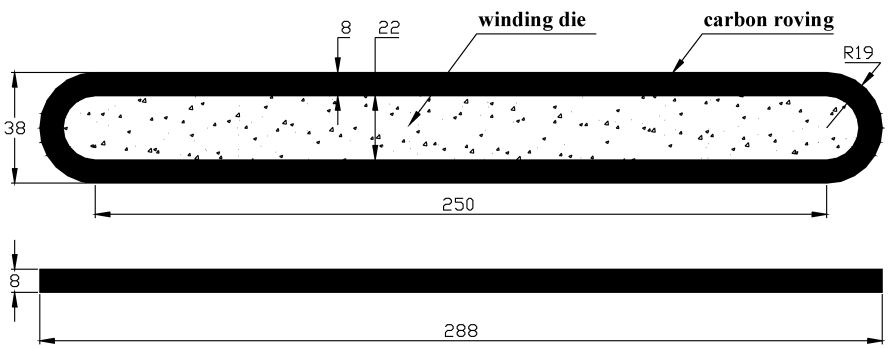


**Figure 15.** Dimensions (in mm) of the irregular ring — benchmark.

Downloaded by [Siauliu University Library] at 06:56 17 February 2013

**Table 1.**
Experimental plan

| Trajectory variables | Discretized winding trajectory | | Offset winding trajectory | |
|---|---|---|---|---|
| Discretized points [$n$] | 3 | 14, 30, 44 | – | – |
| Trajectory angle [$\theta°$] | 2 | 90, 100 | – | – |
| Safety distance [$d$ mm] | 4 | 50, 70, 90, 150 | 3 | 40, 90, 140 |
| Nominal winding speed [$S$%] | 3 | 50, 75, 100 | 3 | 50, 75, 100 |
| Winding tension [N] | 70 | | 70 | |
| No. of winding trajectories | 60 | | 27 | |
| No. of layers | 6 | | 6 | |
| No. of coils for layers | 3 | | 3 | |
| Total no. of coils | 1080 | | 486 | |

used with the offset rule. Three values of winding speed ($S = 50\%, 75\%, 100\%$ of maximum value of the robot linear speed equal to 2 m/s) have been considered for both the rules. Three replicates of each trajectory have been carried out and, therefore, 27 winding trajectories have been planned by the offset rule and 60 by the discretized rule. Tension has been set to a value of 70 N, which assures good performances of manufactured composite parts [15, 16].

Each benchmark has involved only 6 layers of the whole irregular ring, since the winding trajectory is the same for each layer wound, if the process parameters are the same. Each layer is formed by 3 coils.

The winding tension has been measured along the winding trajectory by a dynamometer that has been mounted under the winding die. A Kistler piezoelectric platform dynamometer (Type 9257 BA) has been used to measure components of the force along three orthogonal directions ($F_x$, $F_y$ and $F_z$). The data of tension are determined by software that has been developed in Labview® by National Instruments. The tension data have been related to the geometry of the winding die, which is the same for all the winding coils, in order to define a procedure that produces results that are independent of the parameters of the winding trajectory or of the winding time. The profile of the winding die, i.e. the trajectory of roving during winding, has been divided into 40 intervals. The two linear parts of the profile have not been further divided, since when roving is wound along those linear segments it maintains a constant orientation without twisting or tension loosening. Each interval is characterised by a value of tension that is calculated as the average of all the tension values measured for the interval considered along $x$–$y$ axes ($T_x$ and $T_y$ in Fig. 16). The set of 40 tension value constitutes a time series. For every kind of trajectory, the winding tension along the $x$ and $y$ axes has been measured (see Fig. 17) by using the equipment previously described. The measured values of tension have been composed in order to calculate the resultant tension $T$, as shown in Fig. 18. The winding time has been measured by a chronometer.

Downloaded by [Siauliu University Library] at 06:56 17 February 2013

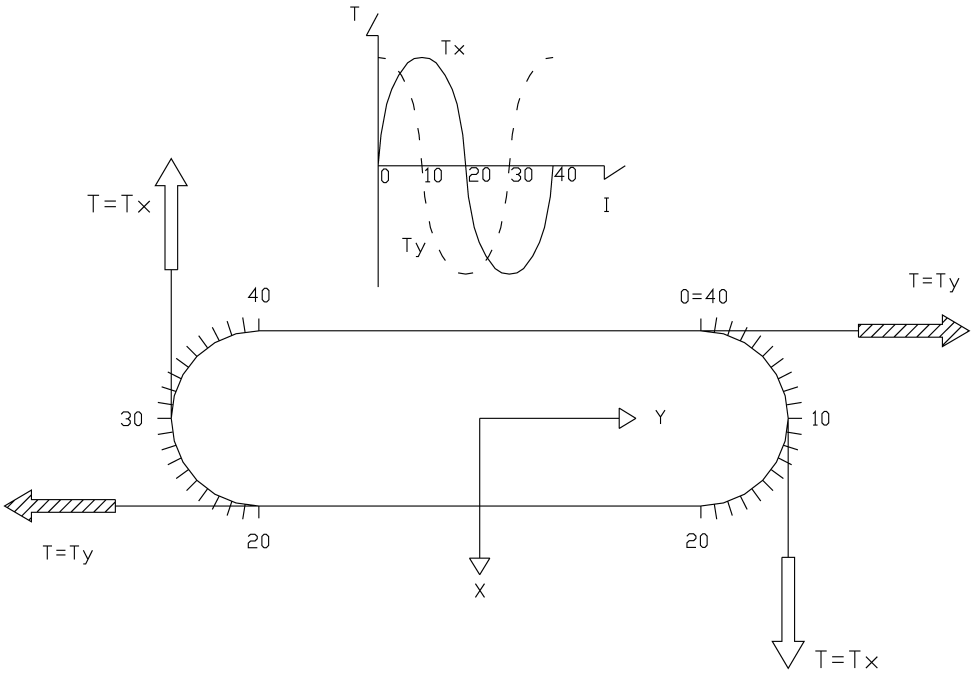


**Figure 16.** Measurement of tension along the two $x$ and $y$ axes.

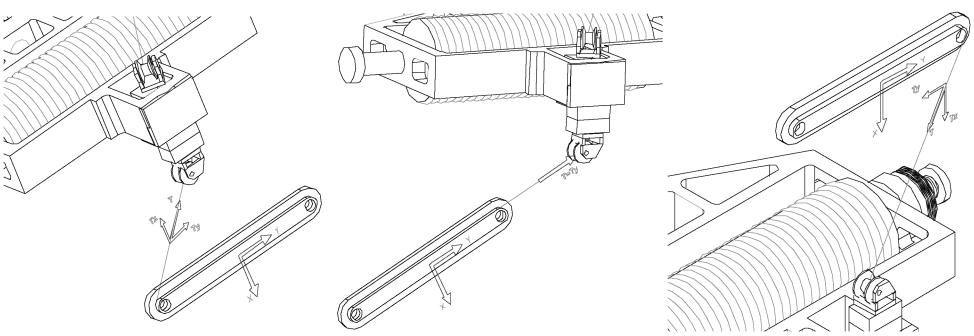

**Figure 17.** Winding tension ($T$, $T_x$, $T_y$) during the roving deposition around the die.

If the tension applied to the roving during its winding along the bending surfaces is kept constant, the compactness pressure remains constant, since the bending radius is constant too. However, the compactness pressure when roving is placed on the two planar surfaces is null; there is only the tension value, since the bending radius in infinite. Therefore, we have chosen this kind of benchmark to have a tension value constant along the whole winding.

The comparison among the values of tension shows that the offset rule allows the tension on roving during winding to be kept nearer to 70 N than does use of the discretized rule. The clutch applies to the roving a tension value of 70 N in static friction conditions before unwinding (nominal value of tension). The discretized

Downloaded by [Siauliu University Library] at 06:56 17 February 2013

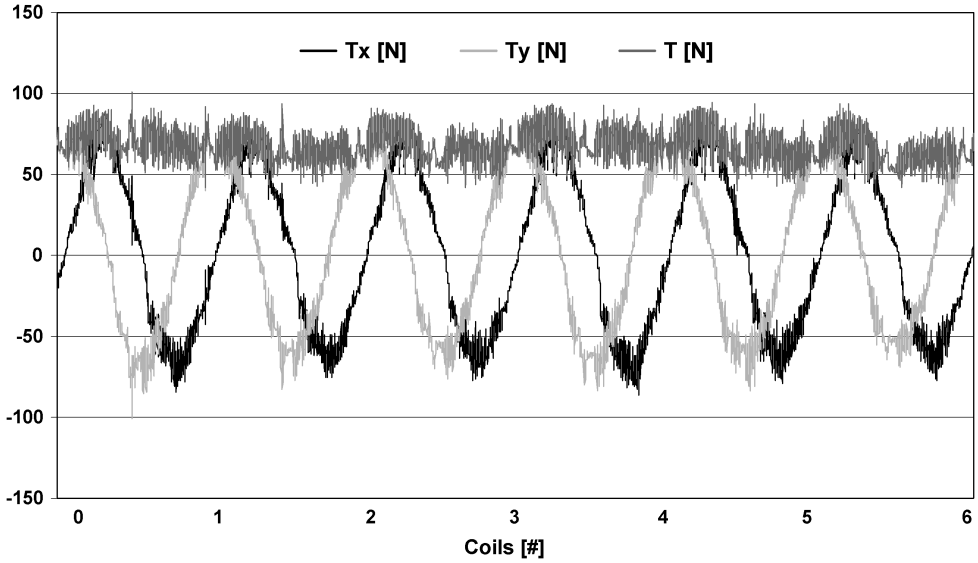


**Figure 18.** Example of winding tension ($T$, $T_x$, $T_y$) trend *vs.* coils for a trajectory typology.

rule plans winding trajectories characterised by many points, along which the deposition head has to move. Each point of the winding trajectory implies a deceleration of the deposition head to approach it, and then an acceleration. The resulting clear effect is a non-continuous unwinding of the roving from the spool that involves an increasing amount of roving unwound from the spool but not yet wound on the die. Therefore, the tension on roving that has to be wound on the die goes away from the nominal value. The offset rule implies a continuous winding of roving on the die through an almost constant winding speed. This constant speed involves a centrifugal force acting on the roving during its winding along a circular line. In this case the resulting value of tension on the roving comes nearer to the nominal value.

Figure 19 shows that the difference ($\Delta T$) between the nominal value of tension (70 N) and the average of the measured values. The average value of $\Delta T$ due to the offset rule is significantly different from that due the discretized rule, as testified by the Student's test ($t$-value $= -2.68$, $p$-value $= 0.009$); the first is nearer to 0 than the second one. Moreover, the offset rule involves a $\Delta T$ value that approaches 0 with the increase of the winding speed, while the contrary is true for the discretized rule. Figures 20–22 present the relationship between $\Delta T$ and winding speed for different values of the number $n$ of points, of the safety distance $d$ and of the trajectory angle $\theta$. Figure 20 shows that an increase of the number of points makes the trajectory more continuous and, therefore, the tension on the roving moves near to the nominal value, while an increase of the winding speed involves an increase of $\Delta T$ value that is greater as the number of points increases. Figure 21 shows that increasing the trajectory angle allows recovery of any roving unwound by the spool by keeping the tension on the roving nearer to the nominal value. Figure 22 shows

Downloaded by [Siauliu University Library] at 06:56 17 February 2013

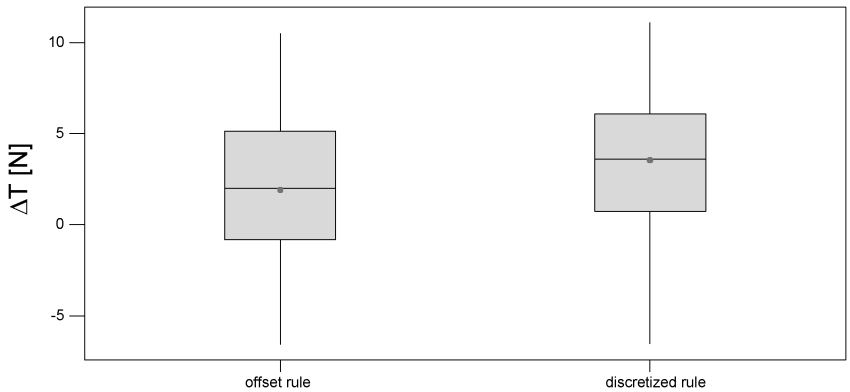


**Figure 19.** Boxplot of $\Delta T$ for offset and discretized planning rules.

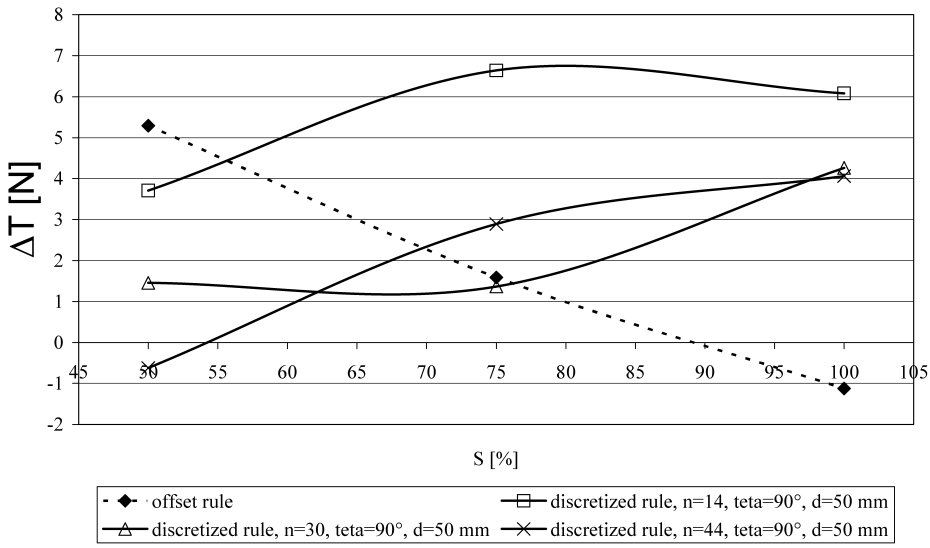


**Figure 20.** Comparison among the average values of tension due to the offset and discretized rules for different values of the number of points *vs.* the winding speed ($\theta = \text{cost} = 90°$, $d = \text{cost} = 50$ mm).

how decreasing the safety distance moves the tension on the roving nearer to the nominal value.

The trajectory planned by the discretized rule and characterized by an average tension value that is the nearest to 70 N ($\Delta T = 0.29$ N), i.e. the trajectory planned through the following parameters $n = 44$, $\theta = 100°$, $d = 50$ mm and $S = 50\%$ (see Fig. 23), gives results that are better than the worst trajectory ($d = 90$ mm, $S = 50\%$, $\Delta T = 5.29$ N) planned by the offset rule. However, it is comparable with the best trajectory ($d = 90$ mm, $S = 100\%$, $\Delta T = -1.12$ N) due to the offset rule (see Fig. 24). The discretized worst trajectory ($n = 14$, $\theta = 90°$, $d = 150$ mm and $S = 50\%$) is characterized by a $\Delta T = 8.57$ N that is greater than that characterizing the offset worst trajectory.

Downloaded by [Siauliu University Library] at 06:56 17 February 2013

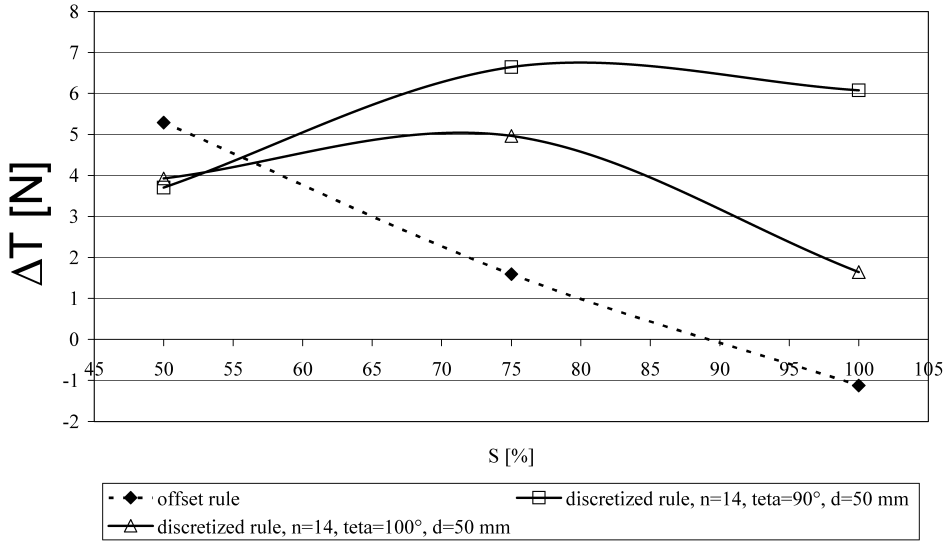


**Figure 21.** Comparison among the average values of tension due to the offset and discretized rules for different values of the trajectory angle *vs.* the winding speed ($n = \text{cost} = 14$, $d = \text{cost} = 50$ mm).

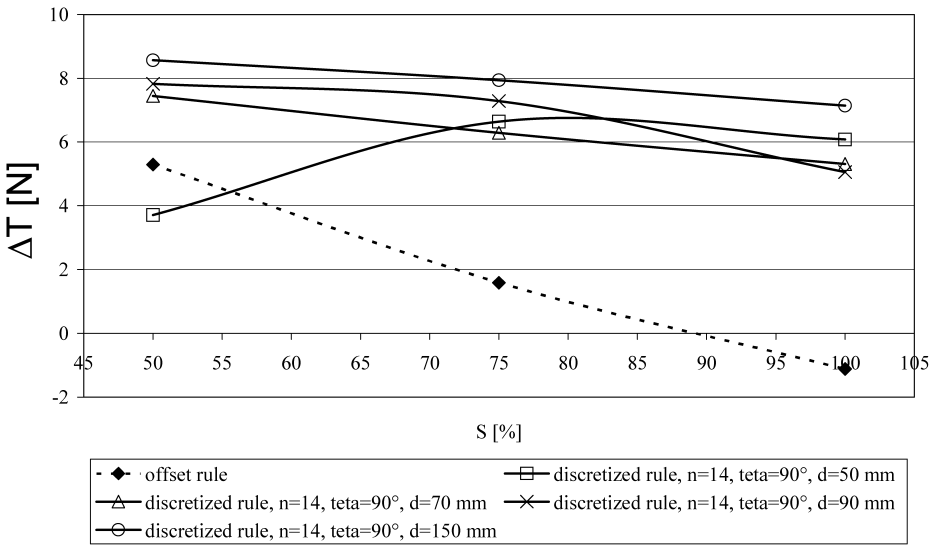


**Figure 22.** Comparison among the average values of tension due to the offset and discretized rules for different values of the safety distance *vs.* the winding speed ($n = \text{cost} = 14$, $\theta = \text{cost} = 90°$).

The comparison among the values of winding time shows that the offset rule decreases the average value of time by about 75% of that due to the discretized rule, as shown in Fig. 25. The reason is that the offset trajectory assures the robot moves with a nearly constant speed along the whole path that is characterized by few points; the discretized rule demands that the deposition head decelerate and then

Downloaded by [Siauliu University Library] at 06:56 17 February 2013

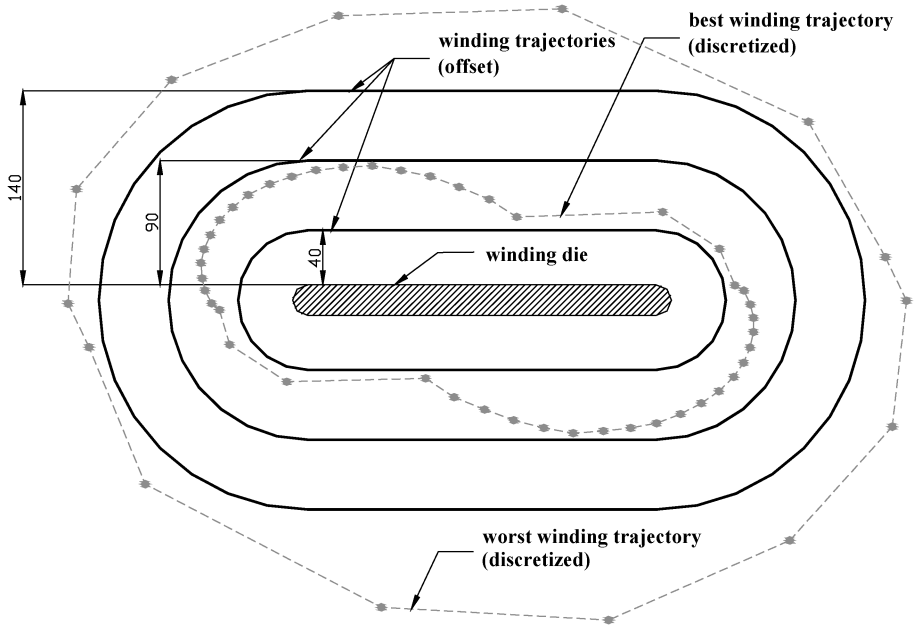


**Figure 23.** Two trajectories planned by the discretized rule ($n = 44$, $\theta = 100°$, $d = 50$ mm; $n = 14$, $\theta = 90°$, $d = 150$ mm) compared with the three possible offset trajectories.

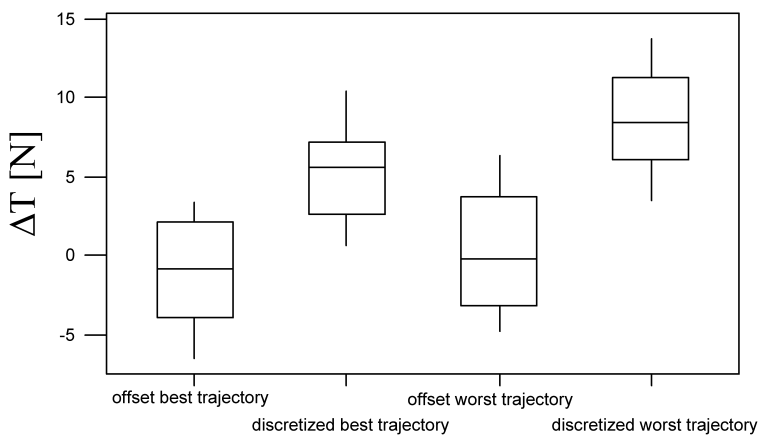


**Figure 24.** Comparison of tension values of the best discretized trajectory ($n = 44$, $\theta = 100°$, $d = 50$ mm and $S = 50\%$), of the worst discretized trajectory ($n = 14, \theta = 90°, d = 150$ mm and $S = 50\%$), of the offset best trajectory ($d = 90$ mm and $S = 100\%$) and of the offset worst trajectory ($d = 90$ mm and $S = 50\%$).

accelerate for each point of the path and, therefore, produces a longer winding time. The reduction in winding time due to the offset rule is not affected by the winding speed, as shown in Fig. 26. Moreover, the trajectory planned by the discretized rule and characterized by the shortest value of the winding time (7.23 s), i.e. the tra-

Downloaded by [Siauliu University Library] at 06:56 17 February 2013

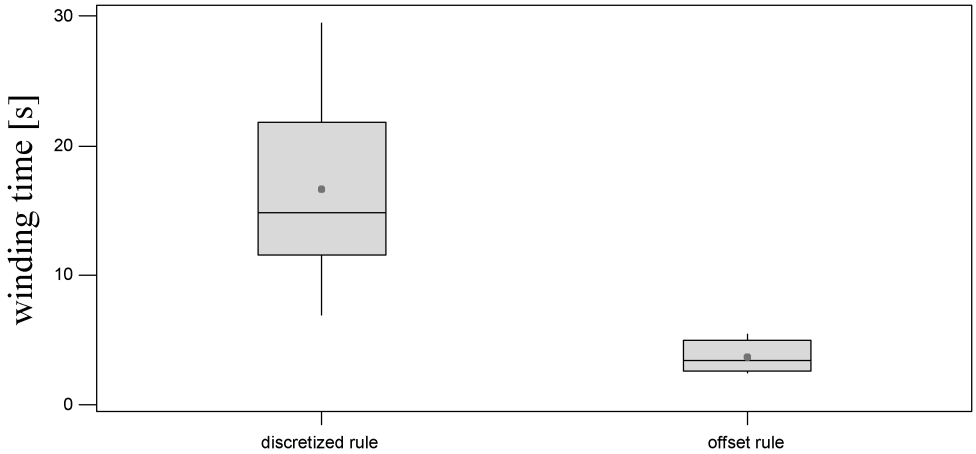


**Figure 25.** Boxplot of winding time for offset and discretized planning rules.

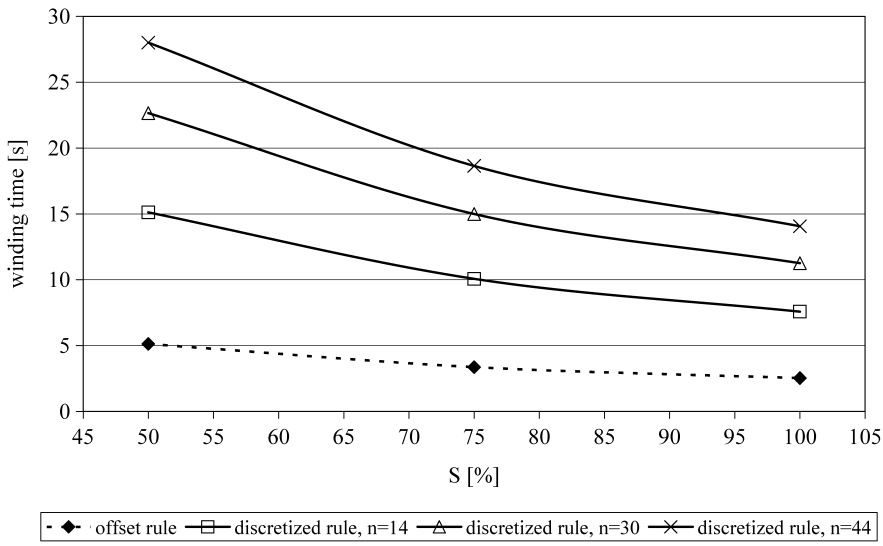


**Figure 26.** Comparison among the average values of winding time due to the offset and discretized rules for different values of the number of points *vs.* the winding speed.

jectory planned through the following parameters $n = 14$, $\theta = 90°$, $d = 50$ mm and $S = 100\%$ (see Fig. 27), gives results that are worse than the worst ($d = 140$ mm, $S = 50\%$, time = 6.15 s) trajectory planned by offset rule (see Fig. 28).

It is possible to approximate the path of the robot deposition head around each point by introducing a circular line in order to reduce the effects of acceleration and deceleration on both the winding tension and the winding time for the trajectories planned by means of the discretized rule. However, these changes of the winding trajectory may involve tension loosening.

Downloaded by [Siauliu University Library] at 06:56 17 February 2013

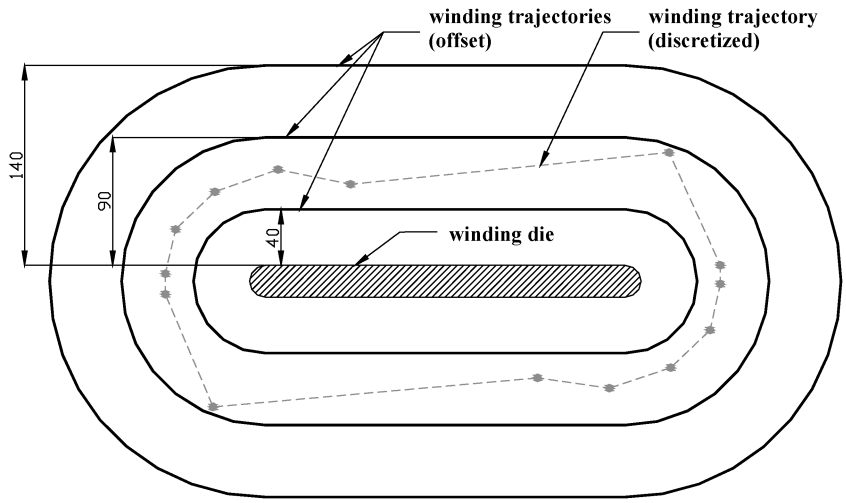


**Figure 27.** Trajectory planned by discretized rule with the lowest winding time value ($n = 14$, $\theta = 90°$, $d = 50$ mm, $S = 100\%$) compared with the three possible offset trajectories.

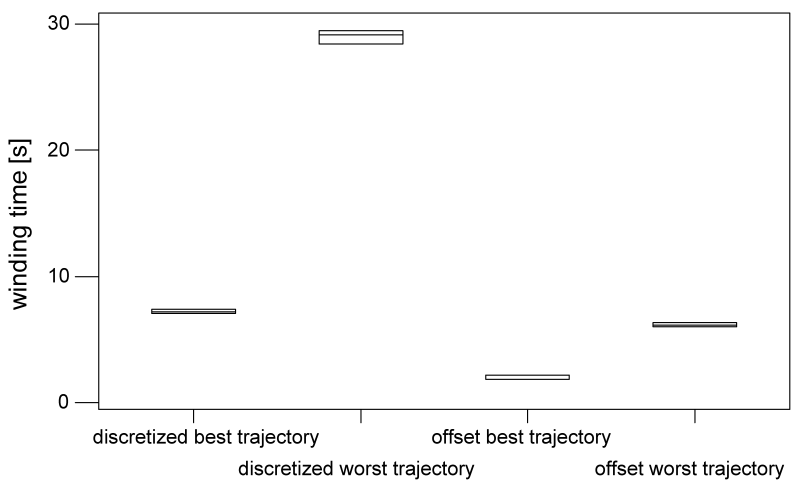


**Figure 28.** Comparison of winding time of the best discretized trajectory ($n = 44$, $\theta = 100°$, $d = 50$ mm and $S = 50\%$), of the worst discretized trajectory ($n = 14$, $\theta = 90°$, $d = 50$ mm and $S = 100\%$), of the offset best trajectory ($d = 40$ mm and $S = 100\%$) and of the offset worst trajectory ($d = 140$ mm and $S = 50\%$).

## 5. Conclusions

The present work compares two rules developed to plan the winding trajectory for manufacturing structural parts, whose shape is obtained by sweeping a full section around a 3D curve that has to be closed and not crossing, by robotized filament winding. The two rules are developed by the authors: they are general and innova-

Downloaded by [Siauliu University Library] at 06:56 17 February 2013

tive, since no general logic has been ever developed for the considered composite manufacturing technology.

The present work shows that the offset rule makes it possible both to keep the tension on roving near to the nominal value of 70 N during winding and to strongly decrease the winding time. The value of 70 N assures good performances of manufactured composite parts. The offset rule produces the same results of the best trajectories planned by the discretized rule in terms of winding tension, but it cuts about 75% off the winding time connected with the discretized rule. Attention should be paid when the planned offset trajectory interferes with the winding die, whereas it is needed to add a set of points by following the constraints on the geometric parameters introduced in the present work in order to prevent any such interference.

The offset rule is the most effective strategy to plan the winding trajectory that the deposition head of a robot has to follow in order to manufacture structural parts of good mechanical performance in a short time. The discretized rule must be used if the available robotized cell is poorly flexible, i.e. when the robotized cell available to wind the part does not allow movement of the deposition head along a curvilinear segment, such as a Cartesian robot does.

This work provides a useful step towards the optimization of robotized filament winding technology.

*Acknowledgements*

The authors are grateful to Anagni Agusta-Westland especially to Dr. F. Natalizia for supporting this work.

## References

1. K. V. Steiner, Development of a robotic filament winding workstation for complex geometries, in: *35th Int. SAMPE Symp. Exhibition Proc.*, Anaheim, CA, USA, pp. 757–766 (1990).
2. D. A. Saravanos and J. S. Lamancusa, Optimum structural design of robotic manipulators with fiber reinforced composite materials, *Computers and Structures* **36**, 119–132 (1990).
3. S. Cantoni, F. De Nicola, G. Di Vita, G. Totano and M. Farioli, Computer aided manufacturing of composite complex shape helicopter structural elements by robot winding, in: *25th Eur. Rotocraft Forum*, Roma, Italy (1999).
4. J. Scholliers and H. Van Brussel, Computer-integrated filament winding: computer-integrated design, robotic filament winding and robotic quality control, *Comp. Manuf.* **5**, 15–23 (1994).
5. L. Markov and R. M. H. Cheng, Conceptual design of robotic filament winding complexes, *Mechatronics* **6**, 881–896 (1996).
6. S. Seereeram and J. Y. Wen, An all geodesic algorithm for filament winding of a T-shaped form, *IEEE Trans. Ind. Electron.* **3**, 484–490 (1991).
7. J. Scholliers and H. Van Brussel, Design and off-line programming of a robotic tape winding cell, *Robot. Computer-Integrated Manuf.* **12**, 93–98 (1996).
8. S. Chan, M. Munro and A. Fahim, Accuracy-speed relationships of a robotic filament winding cell, *Robot. Computer-Integrated Manuf.* **12**, 3–13 (1996).

Downloaded by [Siauliu University Library] at 06:56 17 February 2013

9. D. Cohen, Influence of filament winding parameters on composite vessel quality and strength, *Composites Part A* **28**, 1035–1047 (1997).
10. B. Lauke and K. Friedrich, Evaluation of processing parameters of thermoplastic composites fabricated by filament winding, *Compos. Manuf.* **4**, 93–101 (1993).
11. T. Imamura, T. Kuroiwa, K. Terashima and H. Takemoto, Design and tension control of filament winding system, *IEEE Int. Conf. Systems, Man and Cybernetics* **2**, 660–670 (1999).
12. P. Mertiny and F. Ellyin, Influence of the filament winding tension on physical and mechanical properties of reinforced composites, *Composites: Part A* **33**, 1615–1622 (2002).
13. L. Carrino, W. Polini and L. Sorrentino, Modular structure of a new feed-deposition head for a robotized filament winding cell, *Compos. Sci. Technol.* **63**, 2255–2263 (2003).
14. L. Carrino, W. Polini and L. Sorrentino, Experimental validation of a new fibre deposition device for a robotized filament winding cell, in: *Proc. ECCM10 10th Eur. Conf. Compos. Mater*. Abstract 311 Brugge, Belgium, June 3–7 (2002).
15. L. Carrino, W. Polini and L. Sorrentino, A new robotized filament winding cell to manufacture complex shape parts, *SME Technical Papers*, ID: TP03PUB226, Paper No: EM03–324 (2003).
16. W. Polini and L. Sorrentino, Influence of winding speed and winding trajectory on tension in robotized filament winding of full section parts, *Compos. Sci. Technol.* **65**, 1574–1581 (2005).

Downloaded by [Siauliu University Library] at 06:56 17 February 2013